SELT & DELT - FAQ

Single Ended Loop Test (SELT) is a command issued from the DSLAM (Digital Subscriber Access Multiplexer) in the Central Office (CO) or Remote Cabinet Digital Loop Carrier (DLC) or Broadband Loop Carrier (BLC) to test and record the copper metrics of a telephone local loop. Some products reference Single Ended Line Testing.

SELT is being standardized by the ITU-T Study Group 15, Question 4 working group as working document G.selt. This standardization process will ensure a consistent set of commands and responses from different vendors to service provider management stations.

The major components for a SELT test are shown in Figure 1. The DSLAM sends the commands to test the loop metrics. Within the DSLAM, starting a SELT test sequence may require the bypassing of the AFE (Analog Front End) and data pump circuits. The DSLAM needs to also ensure the Central Office (CO) or Remote Cabinet splitter is bypassed during the test – this can be a N/C (Normally Closed) relay which is opened for the test. These bypass devices allow the DSLAM to inspect the copper OSP (Outside Plant) directly to ensure an accurate measurement.

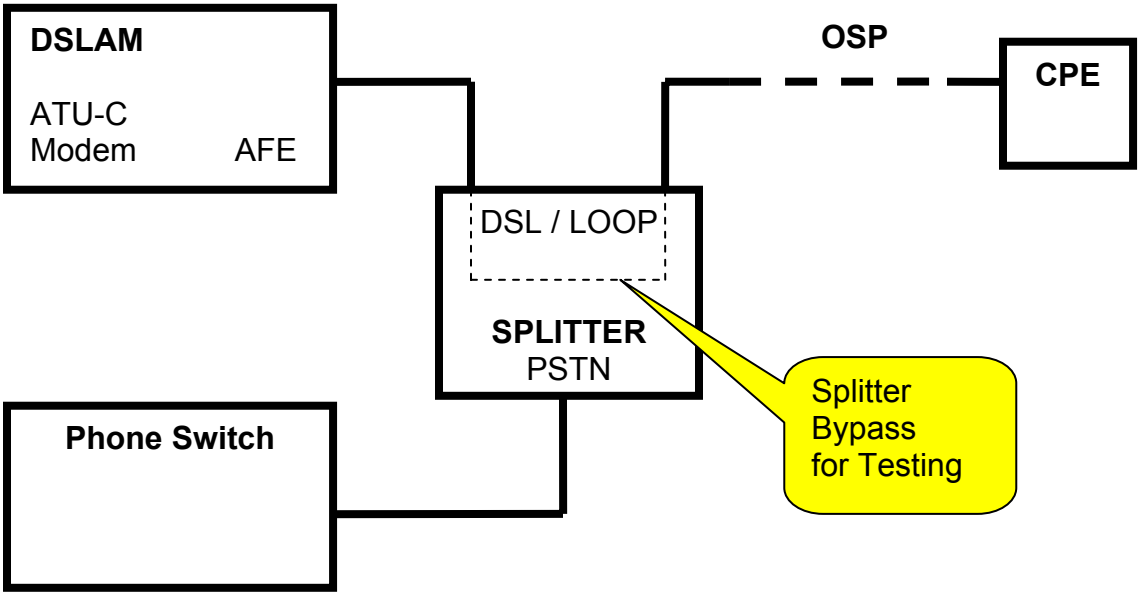

Figure 1: SELT Configuration

DELT (dual-ended line testing) or loop diagnostics mode has been defined in ADSL2 or ITU-T G.992.3 standard.

In general, SELT is more useful for pre-installation loop qualification because the remote end need not be connected. It can be used for loop diagnostics when the loop impairment is so severe that DELT can't be used because of load coils or a short. But DELT is more useful when both ends are connected because it provides better loop diagnostics and more detailed information.

DELT requires a modification to the CPE (Customer Premises Equipment) splitter and/or modem to allow for OSP (Outside Plant) termination. The negative side of DELT is that it is dependent upon upgrading the customer site which is more difficult for the service provider to control. The positive aspect of DELT is that it can provide more accurate test measurements.

It appears that SELT can deliver copper metrics within +/- 10% for OSP loops under 9,000 feet (2,740 m). Lower cost testing and reduced truck rolls to the customer site makes SELT more attractive than DELT.

Benefits of SELT

Pre-qualification of a loop can be greatly aided with SELT including;

- expected data rate
- bundle disturbers estimation
- TDR (Time Domain Reflectometry)
- ICN (Idle Channel Noise)

Maintaining DSL can be assisted with;

- trouble shooting (ILEC, CLEC, end-customer)
- SLA (Service Level Agreement) verification
- Bundle management of disturbers
- SNR (Signal to Noise Ratio measurement (tending downward?)
- ICN (Idle Channel Noise) measurement

Feature	SELT	DELT
Loop Length	Yes	Yes
Loop Gauge	Yes	Yes
Bridged Taps Location	Yes	Yes
Bridged Taps Length	Yes	Yes
Bridged Taps Gauge	Yes	Yes
Load Coils Existence	Yes	Not Applicable
Load Coils Location	Yes	Not Applicable
Short on the Line	Yes	Not Applicable
ICN (Idle Channel Noise)	1 direction only	Yes
Loop Interference Analysis	Yes	Yes
Requires Enhanced CPE	No	Yes
Requires dedicated DSLAM port	Yes	No

SELT Implementation
SELT is implemented in three modules;

- SELT-PMD (Single Ended Loop Test – Physical Medium Dependent)
  - perform the physical medium (copper) measurements
  - excitation tests
  - non-excitation tests

- SELT-P (Single Ended Loop Test – Processing)
  - Process the primary parameters results
  - Create Management Information Block (MIB)

- SELT-ME (Single Ended Loop Test – Management Entity)
  - Operations Support System (OSS) interface
  - Uses the Q-interface to send the MIB data to the OSS

SELT can be integrated with the option to create an open circuit, short circuit or a circuit terminated with 100 ohms. The different termination options can enhance the ability of the service provider to fully characterize the loop make up. The 100 ohm termination will allow for cross talk measurement in the network equipment.

Clearly, SELT can reduce costs in the deployment of DSL.

Wilcom
P.O. Box 508, Laconia, NH 03247
Tel: 603/524-2622 • Fax: 603/524-3735
www.wilcominc.com